CCTV 证券资讯 发现品牌 —— 优 选 品 牌 ——

ELSKY SPC108 Mini PC Specifications

Rear interface diagram ↓



Front interface diagram ↓



Rear interface: VGA + dual network ↓



Rear interface: VGA + single network ↓



Rear interface: dual HDMI + dual network ↓



Rear interface: dual HDMI + single network ↓







Host size ↓

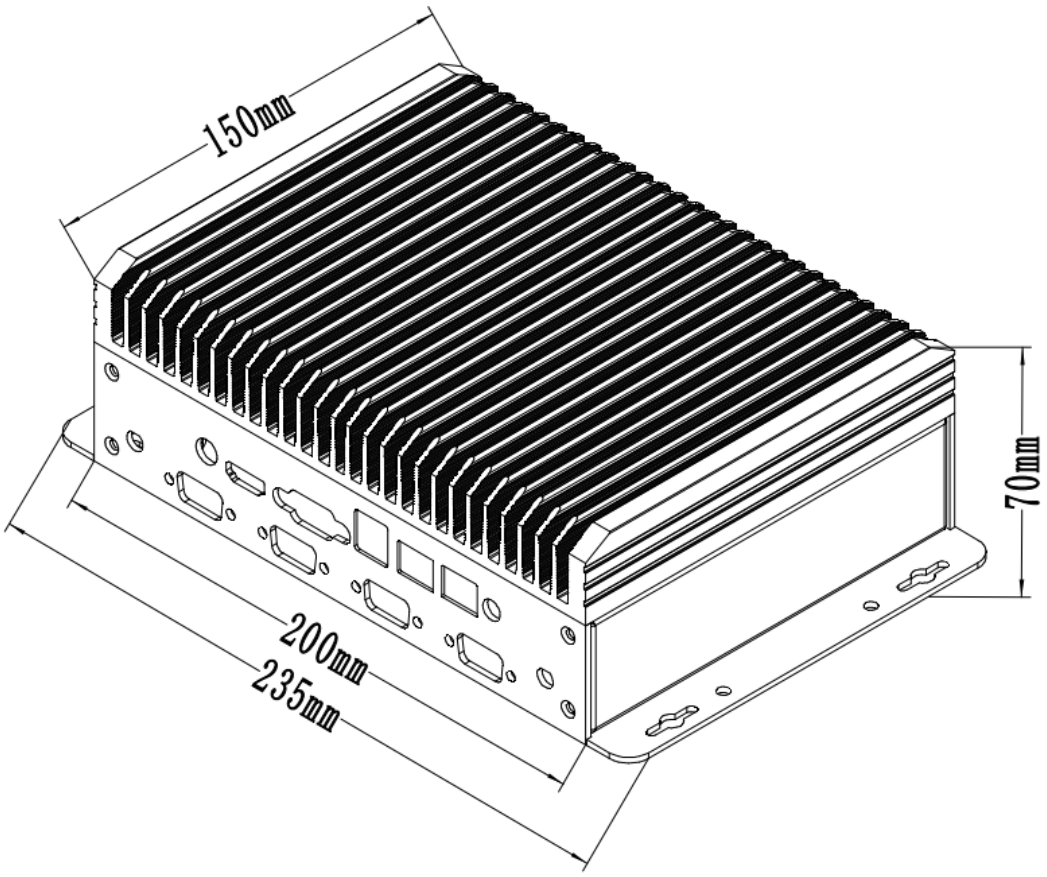

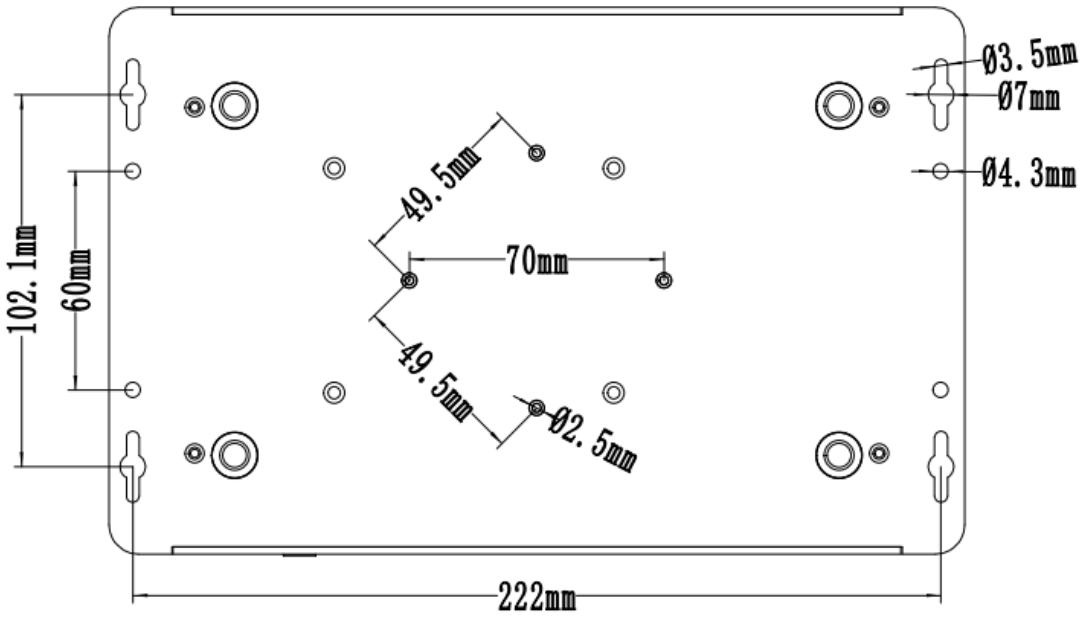

The pictures are for reference only, please refer to the actual product!

Product model ordering options:

Motherboard model	CPU	4K	LAN	COM	USB2.0	USB3.2	SSD	Memory	Power
3.5 inch motherboard M108SE	Support Whiskey Lake 8th generation Comet Lake 10th generation Core i3, i5, i7	support	1	6	6	2	1*M.2 1*SATA 1*Mini-PCIE can be changed to support MSATA	1*NB-DDR4 32G(MAX)	+12V/19V
			2	6	4	2			

Product specification information

PC size	235mm(L)*150mm(W)*70mm(H)	
Cooling system	Fanless + chassis integrated cooling	
Color	Iron gray	
CPU	Support 8th generation Whiskey Lake CPU: I3-8145U, I5-8265U, I7-8665U, etc.	
	Support 10th generation Comet Lake CPU: I3-10110U, I5-10210U, I7-10510U, etc.	
Power supply	1*DC_IN	The inner diameter of the DC head is 2.5MM, supporting 12V/19V The mini PC consumes about 60W when fully loaded. It is recommended to use a power supply of 12V7A or 19V4A or above
Memory	1*SO DIMM slot	NB-DDR4 memory, supports 2133/2400/2666/2933MHz memory, supports up to 32 GB
Internet function	1/2*RJ45_LAN interface	Single network supports Intel WG i219V Gigabit network card Dual network supports Intel WG i219V+Realtek 8111H dual Gigabit network card Support network wake-up and PXE diskless boot function
	1*Mini-PCIE interface	Supports WIFI/Bluetooth/3G/4G module, can be changed to support MSATA
Display function	Integrated Intel UHD Graphics super core graphics card, supports single display, dual display copy, dual display expansion, single display under DOS	
	1*HDMI1 1.4 interface	Support 4K resolution 4096/3840*2160@30Hz
	1*VGA DB15 interface	Support resolution 1920*1080@60Hz
	1*HDMI2 1.4 interface (optional)	Support 4K resolution 4096/3840*2160@30Hz
	VGA interface and HDMI2 interface are two options. The VGA interface is supported by default and can be changed to support HDMI2 interface.	
USB function	2*USB3.2 interface	Standard USB3. 2 Gen1 interface, maximum transmission bandwidth is 5Gbps
	4/6*USB2.0 interface	Standard USB2.0 interface, maximum transmission bandwidth is 480Mbps
	Dual-network PC supports 4*USB2.0 interfaces/Dual-network PC supports 6*USB2.0 interfaces	
Sound function	Integrated Realtek ALC 662/897 HD digital audio decoder, 6-channel high-fidelity audio controller	
	1*SPK interface	Standard 3.5 audio interface, supports audio output

Hard drive function	1*NGFF1 interface (M.2)	Supports Key-M interface M.2 2280 hard drive, supports SATA and NVME (PCIE) protocols by default
	1*SATA1 interface	Support 2.5-inch SSD/HDD hard drive
	1*MSATA interface (optional)	Support MINI_SATA hard disk, support MSATA3.0
	Mini-PCIE interface can be changed to support MSATA interface	
Switch function	1*POWER button	switch button
Other I/O	6*COM	Supports RS232 by default; COM1 supports RS232/RS422/RS485 optional; (BIOS settings)
	2*WiFi antenna interface	External WiFi antenna pole
Operating environment	Working temperature: -10℃~ 60℃ Working humidity: 5%~95% relative humidity, no condensation Storage temperature: - 20℃~ 70℃	
BIOS	AMI BIOS supports power-on, scheduled boot, and intelligent identification of remote power on and off devices.	
Watch Dog	Watchdog programming, supports hardware reset function (level 256, 0~255 seconds)	
Operating system	Support Windows 11, Windows 10, Kirin system, Tongxin system, Linux, etc.	

The following CPU information is for reference only, please contact us for specific needs!

CPU specifications	CPU brand	CPU model	Main frequency	Turbo frequency	CPU power consumption (W)	Full load power consumption is about (W)
8th generation i3	core	8145U	Dual core 2.1G	3.9G	15	60
8th generation i5	core	8365U	Quad core 1.6G	4.1G	15	60
		8265U	Quad core 1.6G	3.9G	15	60
8th generation i7	core	8565U	Quad core 1.8G	4.6G	15	60
		8665U	Quad core 1.9G	4.8G	15	60
10th generation i3	core	10110U	Dual core 2.1G	4.1G	15	60
10th generation i5	core	10310U	Quad core 1.7G	4.4G	15	60
	core	10210U	Quad core 1.6G	4.2G	15	60

10th generation i7	core	10510U	Quad core 1.8G	4.9G	15	60
	core	10610U	Quad core 1.8G	4.9G	15	60
	core	10810U	Six-core 1.1G	4.9G	15	60
	core	10710U	Six-core 1.1G	4.7G	15	60

Illustrate

Except for the accessories listed with the product, the content contained in this manual does not represent the company's commitment. The company reserves the right to change this manual without prior notice.

We are not responsible for any direct, indirect, intentional or unintentional damage and hidden dangers caused by improper installation and use.

Before ordering a product, please ask the dealer for details about whether the product performance meets your needs.

The contents of this manual are protected by copyright and may not be reproduced mechanically, electronically or by any other means without permission.

The final interpretation right of this manual belongs to SHENZHEN ELSKY TECHNOLOGY CO., LTD.

The above ordering information is for reference only. Please contact the us for details.

Motherboard driver download https://pan.baidu.com/s/1ie7qi5NutS53ipPecRSYtw

Access password cbn5